XA Spartan-3E Automotive FPGA Family Data Sheet

DS635 (v1.0) August 31, 2007

Product Specification

Summary

The XA Spartan™-3E family of Field-Programmable Gate Arrays (FPGAs) is specifically designed to meet the needs of high-volume, cost-sensitive automotive electronics applications. The five-member family offers densities ranging from 100,000 to 1.6 million system gates, as shown in Table 1.

Introduction

XA devices are available in both extended-temperature Q-Grade (-40°C to +125°C T_J) and I-Grade (-40°C to +100°C T_J) and are qualified to the industry recognized AEC-Q100 standard.

The XA Spartan-3E family builds on the success of the earlier XA Spartan-3 family by increasing the amount of logic per I/O, significantly reducing the cost per logic cell. New features improve system performance and reduce the cost of configuration. These XA Spartan-3E FPGA enhancements, combined with advanced 90 nm process technology, deliver more functionality and bandwidth per dollar than was previously possible, setting new standards in the programmable logic industry.

Because of their exceptionally low cost, XA Spartan-3E FPGAs are ideally suited to a wide range of automotive applications, including infotainment, driver information, and driver assistance modules.

The XA Spartan-3E family is a superior alternative to mask programmed ASICs and ASSPs. FPGAs avoid the high initial mask set costs and lengthy development cycles, while also permitting design upgrades in the field with no hardware replacement necessary because of its inherent programmability, an impossibility with conventional ASICs and ASSPs with their inflexible hardware architecture.

Features

- Very low-cost, high-performance logic solution for high-volume automotive applications
- Proven advanced 90-nanometer process technology
- Multi-voltage, multi-standard SelectIO™ interface pins
  - Up to 376 I/O pins or 156 differential signal pairs
  - LVCMOS, LVTTL, HSTL, and SSTL single-ended signal standards
  - 3.3V, 2.5V, 1.8V, 1.5V, and 1.2V signaling
  - 622+ Mb/s data transfer rate per I/O
  - True LVDS, RSDS, mini-LVDS, differential HSTL/SSTL differential I/O
  - Enhanced Double Data Rate (DDR) support
  - DDR SDRAM support up to 266 Mb/s
- Abundant, flexible logic resources
  - Densities up to 33,192 logic cells, including optional shift register or distributed RAM support
  - Efficient wide multiplexers, wide logic
  - Fast look-ahead carry logic
  - Enhanced 18 x 18 multipliers with optional pipeline
  - IEEE 1149.1/1532 JTAG programming/debug port
- Hierarchical SelectRAM™ memory architecture
  - Up to 648 Kbits of fast block RAM
  - Up to 231 Kbits of efficient distributed RAM
- Up to eight Digital Clock Managers (DCMs)
  - Clock skew elimination (delay locked loop)
  - Frequency synthesis, multiplication, division
  - High-resolution phase shifting
  - Wide frequency range (5 MHz to over 300 MHz)
- Eight global clocks plus eight additional clocks per each half of device, plus abundant low-skew routing
- Configuration interface to industry-standard PROMs
  - Low-cost, space-saving SPI serial Flash PROM
  - x8 or x8/x16 parallel NOR Flash PROM
- Complete Xilinx ISE™ and WebPACK™ development system support
- MicroBlaze™ and PicoBlaze™ embedded processor cores
- Fully compliant 32-/64-bit 33 MHz PCI™ support
- Low-cost QFP and BGA packaging options
  - Common footprints support easy density migration

Refer to the Spartan-3E complete data sheet (DS312) for a full product description, AC and DC specifications, and package pinout descriptions. Any values shown specifically in this XA Spartan-3E data sheet override those shown in DS312.

For information regarding reliability qualification, refer to RPT081 (Xilinx Spartan-3E Family Automotive Qualification Report) and RPT012 (Spartan-3/3E UMC-12A 90nm Qualification Report).

Key Feature Differences from Commercial XC Devices

- AEC-Q100 device qualification and full PPAP documentation support available in both extended temperature I- and Q-Grades
- Guaranteed to meet full electrical specification over the T_J=-40°C to +125°C temperature range (Q-Grade)

© 2007 Xilinx, Inc. All rights reserved. XILINX, the Xilinx logo, and other designated brands included herein are trademarks of Xilinx, Inc.
PCI is a trademark of PCI SIG. All other trademarks are the property of their respective owners.

- XA Spartan-3E devices are available in the -4 speed grade only.
- PCI-66 is not supported in the XA Spartan-3E product line.
- The readback feature is not supported in the XA Spartan-3E product line.
- XA Spartan-3E devices are available in Step 1 only.
- JTAG configuration frequency reduced from 30 MHz to 25 MHz.
- Platform Flash is not supported within the Xilinx Automotive (XA) family.
- XA Spartan-3E devices are available in Pb-free packaging only.

Table 1: **Summary of XA Spartan-3E FPGA Attributes**

Device	System Gates	Equivalent Logic Cells	CLB Array (One CLB = Four Slices)				Distributed RAM bits[1]	Block RAM bits[1]	Dedicated Multipliers	DCMs	Maximum User I/O	Maximum Differential I/O Pairs
			Rows	Columns	Total CLBs	Total Slices						
XA3S100E	100K	2,160	22	16	240	960	15K	72K	4	2	108	40
XA3S250E	250K	5,508	34	26	612	2,448	38K	216K	12	4	172	68
XA3S500E	500K	10,476	46	34	1,164	4,656	73K	360K	20	4	190	77
XA3S1200E	1200K	19,512	60	46	2,168	8,672	136K	504K	28	8	304	124
XA3S1600E	1600K	33,192	76	58	3,688	14,752	231K	648K	36	8	376	156

Notes:
1. By convention, one Kb is equivalent to 1,024 bits.

Architectural Overview

The XA Spartan-3E family architecture consists of five fundamental programmable functional elements:

- **Configurable Logic Blocks (CLBs)** contain flexible Look-Up Tables (LUTs) that implement logic plus storage elements used as flip-flops or latches. CLBs perform a wide variety of logical functions as well as store data.
- **Input/Output Blocks (IOBs)** control the flow of data between the I/O pins and the internal logic of the device. Each IOB supports bidirectional data flow plus 3-state operation. Supports a variety of signal standards, including four high-performance differential standards. Double Data-Rate (DDR) registers are included.
- **Block RAM** provides data storage in the form of 18-Kbit dual-port blocks.
- **Multiplier Blocks** accept two 18-bit binary numbers as inputs and calculate the product.
- **Digital Clock Manager (DCM) Blocks** provide self-calibrating, fully digital solutions for distributing, delaying, multiplying, dividing, and phase-shifting clock signals.

These elements are organized as shown in Figure 1. A ring of IOBs surrounds a regular array of CLBs. Each device has two columns of block RAM except for the XA3S100E, which has one column. Each RAM column consists of several 18-Kbit RAM blocks. Each block RAM is associated with a dedicated multiplier. The DCMs are positioned in the center with two at the top and two at the bottom of the device. The XA3S100E has only one DCM at the top and bottom, while the XA3S1200E and XA3S1600E add two DCMs in the middle of the left and right sides.

The XA Spartan-3E family features a rich network of traces that interconnect all five functional elements, transmitting signals among them. Each functional element has an associated switch matrix that permits multiple connections to the routing.

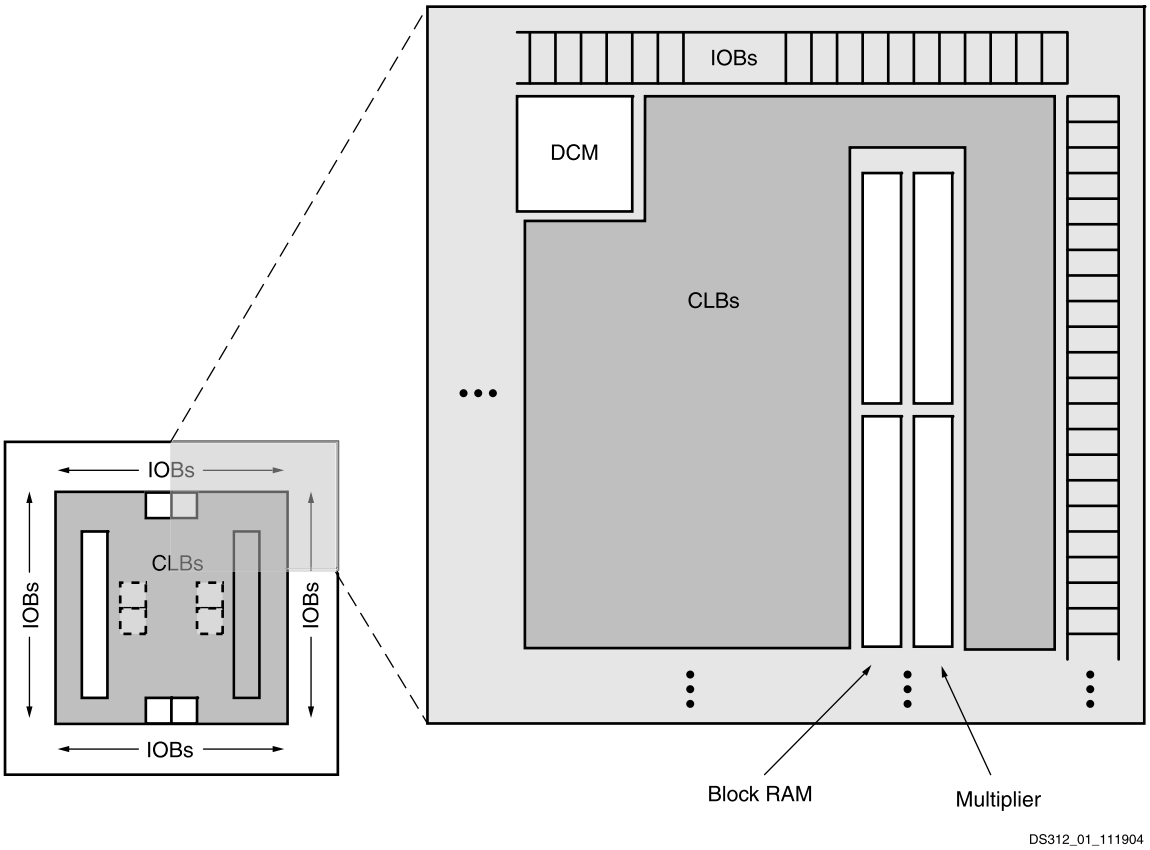

Notes:

1. The XA3S1200E and XA3S1600E have two additional DCMs on both the left and right sides as indicated by the dashed lines. The XA3S100E has only one DCM at the top and one at the bottom.

Figure 1: **XA Spartan-3E Family Architecture**

Configuration

XA Spartan-3E FPGAs are programmed by loading configuration data into robust, reprogrammable, static CMOS configuration latches (CCLs) that collectively control all functional elements and routing resources. The FPGA's configuration data is stored externally in a PROM or some other non-volatile medium, either on or off the board. After applying power, the configuration data is written to the FPGA using any of seven different modes:

- Serial Peripheral Interface (SPI) from an industry-standard SPI serial Flash
- Byte Peripheral Interface (BPI) Up or Down from an industry-standard x8 or x8/x16 parallel NOR Flash
- Slave Serial, typically downloaded from a processor
- Slave Parallel, typically downloaded from a processor
- Boundary Scan (JTAG), typically downloaded from a processor or system tester.

I/O Capabilities

The XA Spartan-3E FPGA SelectIO interface supports many popular single-ended and differential standards. Table 2 shows the number of user I/Os as well as the number of differential I/O pairs available for each device/package combination.

XA Spartan-3E FPGAs support the following single-ended standards:

- 3.3V low-voltage TTL (LVTTL)
- Low-voltage CMOS (LVCMOS) at 3.3V, 2.5V, 1.8V, 1.5V, or 1.2V
- 3V PCI at 33 MHz
- HSTL I and III at 1.8V, commonly used in memory applications
- SSTL I at 1.8V and 2.5V, commonly used for memory applications

XA Spartan-3E FPGAs support the following differential standards:

- LVDS
- Bus LVDS
- mini-LVDS
- RSDS
- Differential HSTL (1.8V, Types I and III)
- Differential SSTL (2.5V and 1.8V, Type I)
- 2.5V LVPECL inputs

Table 2: **Available User I/Os and Differential (Diff) I/O Pairs**

Device	VQG100		CPG132		TQG144		PQG208		FTG256		FGG400		FGG484	
	User	Diff	User	Diff	User	Diff	User	Diff	User	Diff	User	Diff	User	Diff
XA3S100E	**66** *(7)*	**30** *(2)*	**83** *(11)*	**35** *(2)*	**108** *(28)*	**40** *(4)*	-	-	-	-	-	-	-	-
XA3S250E	**66** *(7)*	**30** *(2)*	**92** *(7)*	**41** *(2)*	**108** *(28)*	**40** *(4)*	**158** *(32)*	**65** *(5)*	**172** *(40)*	**68** *(8)*	-	-	-	-
XA3S500E	-	-	**92** *(7)*	**41** *(2)*	-	-	**158** *(32)*	**65** *(5)*	**190** *(41)*	**77** *(8)*	-	-	-	-
XA3S1200E	-	-	-	-	-	-	-	-	**190** *(40)*	**77** *(8)*	**304** *(72)*	**124** *(20)*	-	-
XA3S1600E	-	-	-	-	-	-	-	-	-	-	**304** *(72)*	**124** *(20)*	**376** *(82)*	**156** *(21)*

Notes:

1. All XA Spartan-3E devices provided in the same package are pin-compatible as further described in Module 4: Pinout Descriptions of DS312.
2. The number shown in **bold** indicates the maximum number of I/O and input-only pins. The number shown in (*italics*) indicates the number of input-only pins.

Package Marking

Figure 2 provides a top marking example for XA Spartan-3E FPGAs in the quad-flat packages. Figure 3 shows the top marking for XA Spartan-3E FPGAs in BGA packages except the 132-ball chip-scale package (CPG132). The markings for the BGA packages are nearly identical to those for the quad-flat packages, except that the marking is rotated with respect to the ball A1 indicator. Figure 4 shows the top marking for XA Spartan-3E FPGAs in the CPG132 package.

Note: **No marking is shown for stepping.**

Use the seven digits of the Lot Code to access additional information for a specific device using the Xilinx web-based Genealogy Viewer.

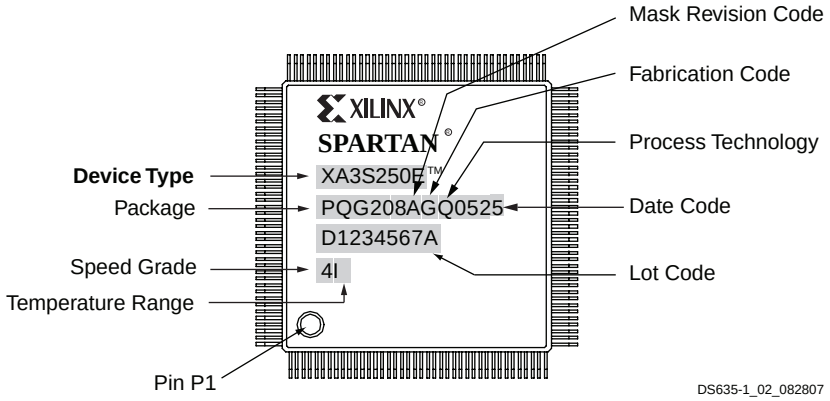

Figure 2: **XA Spartan-3E QFP Package Marking Example**

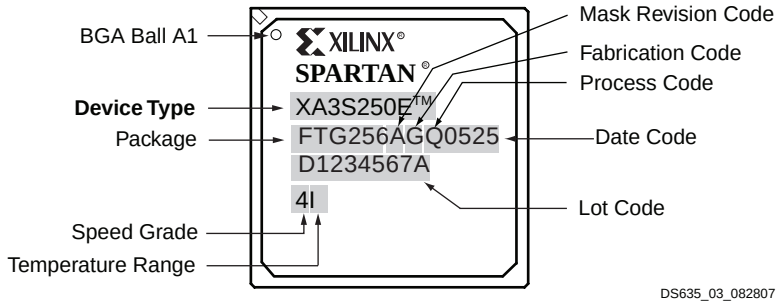

Figure 3: **XA Spartan-3E BGA Package Marking Example**

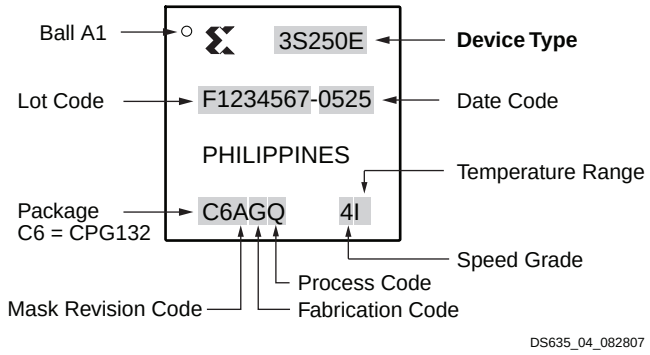

Figure 4: **XA Spartan-3E CPG132 Package Marking Example**

Ordering Information

XA Spartan-3E FPGAs are available in Pb-free packaging options for all device/package combinations. All devices are in Pb-free packages only, with a "G" character to the ordering code. All devices are available in either I-Grade or Q-Grade temperature ranges. Only the –4 speed grade is available for the XA Spartan-3E family. See Table 2 for valid device/package combinations.

Pb-Free Packaging

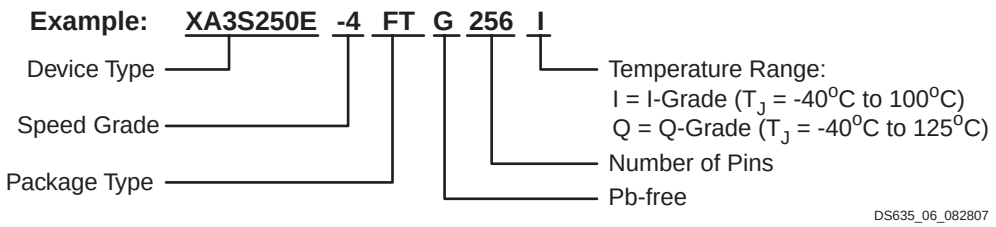

Device	Speed Grade		Package Type / Number of Pins		Temperature Range (T_J)	
XA3S100E	–4	Only	VQG100	100-pin Very Thin Quad Flat Pack (VQFP)	I	I-Grade (–40°C to 100°C)
XA3S250E			CPG132	132-ball Chip-Scale Package (CSP)	Q	Q-Grade (–40°C to 125°C)
XA3S500E			TQG144	144-pin Thin Quad Flat Pack (TQFP)		
XA3S1200E			PQG208	208-pin Plastic Quad Flat Pack (PQFP)		
XA3S1600E			FTG256	256-ball Fine-Pitch Thin Ball Grid Array (FTBGA)		
			FGG400	400-ball Fine-Pitch Ball Grid Array (FBGA)		
			FGG484	484-ball Fine-Pitch Ball Grid Array (FBGA)		

Power Supply Specifications

Table 3: **Supply Voltage Thresholds for Power-On Reset**

Symbol	Description	Min	Max	Units
V_{CCINTT}	Threshold for the V_{CCINT} supply	0.4	1.0	V
V_{CCAUXT}	Threshold for the V_{CCAUX} supply	0.8	2.0	V
V_{CCO2T}	Threshold for the V_{CCO} Bank 2 supply	0.4	1.0	V

Notes:

1. V_{CCINT}, V_{CCAUX}, and V_{CCO} supplies to the FPGA can be applied in any order. However, the FPGA's configuration source (SPI Flash, parallel NOR Flash, microcontroller) might have specific requirements. Check the data sheet for the attached configuration source.
2. To ensure successful power-on, V_{CCINT}, V_{CCO} Bank 2, and V_{CCAUX} supplies must rise through their respective threshold-voltage ranges with no dips at any point.

Table 4: **Supply Voltage Ramp Rate**

Symbol	Description	Min	Max	Units
V_{CCINTR}	Ramp rate from GND to valid V_{CCINT} supply level	0.2	50	ms
V_{CCAUXR}	Ramp rate from GND to valid V_{CCAUX} supply level	0.2	50	ms
V_{CCO2R}	Ramp rate from GND to valid V_{CCO} Bank 2 supply level	0.2	50	ms

Notes:

1. V_{CCINT}, V_{CCAUX}, and V_{CCO} supplies to the FPGA can be applied in any order. However, the FPGA's configuration source (SPI Flash, parallel NOR Flash, microcontroller) might have specific requirements. Check the data sheet for the attached configuration source.
2. To ensure successful power-on, V_{CCINT}, V_{CCO} Bank 2, and V_{CCAUX} supplies must rise through their respective threshold-voltage ranges with no dips at any point.

Table 5: **Supply Voltage Levels Necessary for Preserving RAM Contents**

Symbol	Description	Min	Units
V_{DRINT}	V_{CCINT} level required to retain RAM data	1.0	V
V_{DRAUX}	V_{CCAUX} level required to retain RAM data	2.0	V

Notes:

1. RAM contents include configuration data.

DC Specifications

Table 6: **General Recommended Operating Conditions**

Symbol	Description		Min	Nom	Max	Units
T_J	Junction temperature	I-Grade	–40	25	100	°C
		Q-Grade	–40	25	125	°C
V_{CCINT}	Internal supply voltage		1.140	1.200	1.260	V
V_{CCO}(1)	Output driver supply voltage		1.140	-	3.465	V
V_{CCAUX}	Auxiliary supply voltage		2.375	2.500	2.625	V
ΔV_{CCAUX}(2)	Voltage variance on V_{CCAUX} when using a DCM		-	-	10	mV/ms
V_{IN}	Voltage applied to all User I/O pins and Dual-Purpose pins relative to GND	V_{CCO} = 3.3V	–0.3	-	3.75	V
		$V_{CCO} \leq$ 2.5V	–0.3	-	V_{CCO}+0.3	V
	Voltage applied to all Dedicated pins relative to GND		–0.3	-	V_{CCAUX}+0.3	V

Notes:

1. The V_{CCO} range given here spans the lowest and highest operating voltages of all supported I/O standards. The recommended V_{CCO} range specific to each of the single-ended I/O standards is given in Table 9, and that specific to the differential standards is given in Table 11.
2. Only during DCM operation is it recommended that the rate of change of V_{CCAUX} not exceed 10 mV/ms.

General DC Characteristics for I/O Pins

Table 7: **General DC Characteristics of User I/O, Dual-Purpose, and Dedicated Pins**

Symbol	Description	Test Conditions	Min	Typ	Max	Units
I_L	Leakage current at User I/O, Input-only, Dual-Purpose, and Dedicated pins	Driver is in a high-impedance state, V_{IN} = 0V or V_{CCO} max, sample-tested	–10	–	+10	µA
I_{RPU}(2)	Current through pull-up resistor at User I/O, Dual-Purpose, Input-only, and Dedicated pins	V_{IN} = 0V, V_{CCO} = 3.3V	–0.36	–	–1.24	mA
		V_{IN} = 0V, V_{CCO} = 2.5V	–0.22	–	–0.80	mA
		V_{IN} = 0V, V_{CCO} = 1.8V	–0.10	–	–0.42	mA
		V_{IN} = 0V, V_{CCO} = 1.5V	–0.06	–	–0.27	mA
		V_{IN} = 0V, V_{CCO} = 1.2V	–0.04	–	–0.22	mA

Table 7: **General DC Characteristics of User I/O, Dual-Purpose, and Dedicated Pins *(Continued)***

Symbol	Description	Test Conditions	Min	Typ	Max	Units
R_{PU}(2)	Equivalent pull-up resistor value at User I/O, Dual-Purpose, Input-only, and Dedicated pins (based on I_{RPU} per Note 2)	V_{IN} = 0V, V_{CCO} = 3.0V to 3.45V	2.4	–	10.8	kΩ
		V_{IN} = 0V, V_{CCO} = 2.3V to 2.7V	2.7	–	11.8	kΩ
		V_{IN} = 0V, V_{CCO} = 1.7V to 1.9V	4.3	–	20.2	kΩ
		V_{IN} = 0V, V_{CCO} =1.4V to 1.6V	5.0	–	25.9	kΩ
		V_{IN} = 0V, V_{CCO} = 1.14V to 1.26V	5.5	–	32.0	kΩ
I_{RPD}(2)	Current through pull-down resistor at User I/O, Dual-Purpose, Input-only, and Dedicated pins	V_{IN} = V_{CCO}	0.10	–	0.75	mA
R_{PD}(2)	Equivalent pull-down resistor value at User I/O, Dual-Purpose, Input-only, and Dedicated pins (based on I_{RPD} per Note 2)	V_{IN} = V_{CCO} = 3.0V to 3.45V	4.0	–	34.5	kΩ
		V_{IN} = V_{CCO} = 2.3V to 2.7V	3.0	–	27.0	kΩ
		V_{IN} = V_{CCO} = 1.7V to 1.9V	2.3	–	19.0	kΩ
		V_{IN} = V_{CCO} = 1.4V to 1.6V	1.8	–	16.0	kΩ
		V_{IN} = V_{CCO} = 1.14V to 1.26V	1.5	–	12.6	kΩ
I_{REF}	V_{REF} current per pin	All V_{CCO} levels	–10	–	+10	µA
C_{IN}	Input capacitance	-	3	–	10	pF
R_{DT}	Resistance of optional differential termination circuit within a differential I/O pair. Not available on Input-only pairs.	V_{OCM} Min ≤V_{ICM} ≤V_{OCM} Max V_{OD} Min ≤V_{ID} ≤V_{OD} Max V_{CCO} = 2.5V	–	120	–	Ω

Notes:

1. The numbers in this table are based on the conditions set forth in Table 6.
2. This parameter is based on characterization. The pull-up resistance RPU = VCCO / IRPU. The pull-down resistance RPD = VIN / IRPD.

Table 8: **Quiescent Supply Current Characteristics**

Symbol	Description	Device	I-Grade Maximum	Q-Grade Maximum	Units
I_{CCINTQ}	Quiescent V_{CCINT} supply current	XA3S100E	36	58	mA
		XA3S250E	104	158	mA
		XA3S500E	145	300	mA
		XA3S1200E	324	500	mA
		XA3S1600E	457	750	mA
I_{CCOQ}	Quiescent V_{CCO} supply current	XA3S100E	1.5	2.0	mA
		XA3S250E	1.5	3.0	mA
		XA3S500E	1.5	3.0	mA
		XA3S1200E	2.5	4.0	mA
		XA3S1600E	2.5	4.0	mA

Table 8: **Quiescent Supply Current Characteristics *(Continued)***

Symbol	Description	Device	I-Grade Maximum	Q-Grade Maximum	Units
I_{CCAUXQ}	Quiescent V_{CCAUX} supply current	XA3S100E	13	22	mA
		XA3S250E	26	43	mA
		XA3S500E	34	63	mA
		XA3S1200E	59	100	mA
		XA3S1600E	86	150	mA

Notes:

1. The numbers in this table are based on the conditions set forth in Table 6. Quiescent supply current is measured with all I/O drivers in a high-impedance state and with all pull-up/pull-down resistors at the I/O pads disabled. Typical values are characterized using devices with typical processing at ambient room temperature (T_A of 25°C at V_{CCINT} = 1.2V, V_{CCO} = 3.3V, and V_{CCAUX} = 2.5V). Maximum values are the production test limits measured for each device at the maximum specified junction temperature and at maximum voltage limits with V_{CCINT} = 1.26V, V_{CCO} = 3.45V, and V_{CCAUX} = 2.625V. The FPGA is programmed with a "blank" configuration data file (i.e., a design with no functional elements instantiated). For conditions other than those described above, (e.g., a design including functional elements, the use of DCI standards, etc.), measured quiescent current levels may be different than the values in the table. Use the Web Power Tool or XPower for more accurate estimates. See Note 2.
2. There are two recommended ways to estimate the total power consumption (quiescent plus dynamic) for a specific design: a) The Spartan-3E Web Power Tool at **http://www.xilinx.com/ise/power_tools** provides quick, approximate, typical estimates, and does not require a netlist of the design. b) XPower, part of the Xilinx ISE development software, uses the FPGA netlist as input to provide more accurate maximum and typical estimates.
3. The maximum numbers in this table also indicate the minimum current each power rail requires in order for the FPGA to power-on successfully.

Single-Ended I/O Standards

Table 9: **Recommended Operating Conditions for User I/Os Using Single-Ended Standards**

IOSTANDARD Attribute	V_{CCO} for Drivers(2)			V_{REF}			V_{IL}	V_{IH}
	Min (V)	Nom (V)	Max (V)	Min (V)	Nom (V)	Max (V)	Max (V)	Min (V)
LVTTL	3.0	3.3	3.45	V_{REF} is not used for these I/O standards			0.8	2.0
LVCMOS33(4)	3.0	3.3	3.45				0.8	2.0
LVCMOS25(4,5)	2.3	2.5	2.7				0.7	1.7
LVCMOS18(4)	1.65	1.8	1.95				0.38	0.8
LVCMOS15(4)	1.4	1.5	1.6				0.38	0.8
LVCMOS12(4)	1.1	1.2	1.3				0.38	0.8
PCI33_3	3.0	3.3	3.45				0.3 * V_{CCO}	0.5 * V_{CCO}
PCIX	3.0	3.3	3.45				0.35 * V_{CCO}	0.5 * V_{CCO}
HSTL_I_18	1.7	1.8	1.9	0.8	0.9	1.1	V_{REF} - 0.1	V_{REF} + 0.1
HSTL_III_18	1.7	1.8	1.9	-	1.1	-	V_{REF} - 0.1	V_{REF} + 0.1
SSTL18_I	1.7	1.8	1.9	0.833	0.900	0.969	V_{REF} - 0.125	V_{REF} + 0.125

Table 9: **Recommended Operating Conditions for User I/Os Using Single-Ended Standards *(Continued)***

IOSTANDARD Attribute	V_{CCO} for Drivers(2)			V_{REF}			V_{IL}	V_{IH}
	Min (V)	Nom (V)	Max (V)	Min (V)	Nom (V)	Max (V)	Max (V)	Min (V)
SSTL2_I	2.3	2.5	2.7	1.15	1.25	1.35	V_{REF} - 0.125	V_{REF} + 0.125

Notes:

1. Descriptions of the symbols used in this table are as follows:
   V_{CCO} – the supply voltage for output drivers
   V_{REF} – the reference voltage for setting the input switching threshold
   V_{IL} – the input voltage that indicates a Low logic level
   V_{IH} – the input voltage that indicates a High logic level
2. The V_{CCO} rails supply only output drivers, not input circuits.
3. For device operation, the maximum signal voltage (V_{IH} max) may be as high as V_{IN} max. See Table 72 in DS312.
4. There is approximately 100 mV of hysteresis on inputs using LVCMOS33 and LVCMOS25 I/O standards.
5. All Dedicated pins (PROG_B, DONE, TCK, TDI, TDO, and TMS) use the LVCMOS25 standard and draw power from the V_{CCAUX} rail (2.5V). The Dual-Purpose configuration pins use the LVCMOS25 standard before the User mode. When using these pins as part of a standard 2.5V configuration interface, apply 2.5V to the V_{CCO} lines of Banks 0, 1, and 2 at power-on as well as throughout configuration.

Table 10: **DC Characteristics of User I/Os Using Single-Ended Standards**

IOSTANDARD Attribute		Test Conditions		Logic Level Characteristics	
		I_{OL} (mA)	I_{OH} (mA)	V_{OL} Max (V)	V_{OH} Min (V)
LVTTL(3)	2	2	–2	0.4	2.4
	4	4	–4		
	6	6	–6		
	8	8	–8		
	12	12	–12		
	16	16	–16		
LVCMOS33(3)	2	2	–2	0.4	V_{CCO} – 0.4
	4	4	–4		
	6	6	–6		
	8	8	–8		
	12	12	–12		
	16	16	–16		
LVCMOS25(3)	2	2	–2	0.4	V_{CCO} – 0.4
	4	4	–4		
	6	6	–6		
	8	8	–8		
	12	12	–12		
LVCMOS18(3)	2	2	–2	0.4	V_{CCO} – 0.4
	4	4	–4		
	6	6	–6		
	8	8	–8		
LVCMOS15(3)	2	2	–2	0.4	V_{CCO} – 0.4
	4	4	–4		
	6	6	–6		

Table 10: **DC Characteristics of User I/Os Using Single-Ended Standards *(Continued)***

IOSTANDARD Attribute		Test Conditions		Logic Level Characteristics	
		I_{OL} (mA)	I_{OH} (mA)	V_{OL} Max (V)	V_{OH} Min (V)
LVCMOS12(3)	2	2	–2	0.4	V_{CCO} - 0.4
PCI33_3(4)		1.5	–0.5	10% V_{CCO}	90% V_{CCO}
PCIX		1.5	–0.5	10% V_{CCO}	90% V_{CCO}
HSTL_I_18		8	–8	0.4	V_{CCO} - 0.4
HSTL_III_18		24	–8	0.4	V_{CCO} - 0.4
SSTL18_I		6.7	–6.7	V_{TT} – 0.475	V_{TT} + 0.475
SSTL2_I		8.1	–8.1	V_{TT} – 0.61	V_{TT} + 0.61

Notes:

1. The numbers in this table are based on the conditions set forth in Table 6 and Table 9.
2. Descriptions of the symbols used in this table are as follows:

   I_{OL} — the output current condition under which V_{OL} is tested
   I_{OH} — the output current condition under which V_{OH} is tested
   V_{OL} — the output voltage that indicates a Low logic level
   V_{OH} — the output voltage that indicates a High logic level
   V_{IL} — the input voltage that indicates a Low logic level
   V_{IH} — the input voltage that indicates a High logic level
   V_{CCO} — the supply voltage for output drivers
   V_{REF} — the reference voltage for setting the input switching threshold
   V_{TT} — the voltage applied to a resistor termination
3. For the LVCMOS and LVTTL standards: the same V_{OL} and V_{OH} limits apply for both the Fast and Slow slew attributes.
4. Tested according to the relevant PCI specifications.

Differential I/O Standards

Table 11: **Recommended Operating Conditions for User I/Os Using Differential Signal Standards**

IOSTANDARD Attribute	V_{CCO} for Drivers(1)			V_{ID}			V_{ICM}		
	Min (V)	Nom (V)	Max (V)	Min (mV)	Nom (mV)	Max (mV)	Min (V)	Nom (V)	Max (V)
LVDS_25	2.375	2.50	2.625	100	350	600	0.30	1.25	2.20
BLVDS_25	2.375	2.50	2.625	100	350	600	0.30	1.25	2.20
MINI_LVDS_25	2.375	2.50	2.625	200	-	600	0.30	-	2.2
LVPECL_25(2)	Inputs Only			100	800	1000	0.5	1.2	2.0
RSDS_25	2.375	2.50	2.625	100	200	-	0.3	1.20	1.4
DIFF_HSTL_I_18	1.7	1.8	1.9	100	-	-	0.8	-	1.1
DIFF_HSTL_III_18	1.7	1.8	1.9	100	-	-	0.8	-	1.1
DIFF_SSTL18_I	1.7	1.8	1.9	100	-	-	0.7	-	1.1
DIFF_SSTL2_I	2.3	2.5	2.7	100	-	-	1.0	-	1.5

Notes:

1. The V_{CCO} rails supply only differential output drivers, not input circuits.
2. V_{REF} inputs are not used for any of the differential I/O standards.

Table 12: **DC Characteristics of User I/Os Using Differential Signal Standards**

IOSTANDARD Attribute	V_{OD}			ΔV_{OD}		V_{OCM}			ΔV_{OCM}		V_{OH}	V_{OL}
	Min (mV)	Typ (mV)	Max (mV)	Min (mV)	Max (mV)	Min (V)	Typ (V)	Max (V)	Min (mV)	Max (mV)	Min (V)	Max (V)
LVDS_25	250	350	450	–	–	1.125	–	1.375	–	–	–	–
BLVDS_25	250	350	450	–	–	–	1.20	–	–	–	–	–
MINI_LVDS_25	300	–	600	–	50	1.0	–	1.4	–	50	–	–
RSDS_25	100	–	400	–	–	1.1	–	1.4	–	–	–	–
DIFF_HSTL_I_18	–	–	–	–	–	–	–	–	–	–	V_{CCO} – 0.4	0.4
DIFF_HSTL_III_18	–	–	–	–	–	–	–	–	–	–	V_{CCO} – 0.4	0.4
DIFF_SSTL18_I	–	–	–	–	–	–	–	–	–	–	V_{TT} + 0.475	V_{TT} – 0.475
DIFF_SSTL2_I	–	–	–	–	–	–	–	–	–	–	V_{TT} + 0.61	V_{TT} – 0.61

Notes:

1. The numbers in this table are based on the conditions set forth in Table 6, and Table 11.
2. Output voltage measurements for all differential standards are made with a termination resistor (R_T) of 100Ω across the N and P pins of the differential signal pair. The exception is for BLVDS, shown in Figure 5 below.
3. At any given time, no more than two of the following differential output standards may be assigned to an I/O bank: LVDS_25, RSDS_25, MINI_LVDS_25

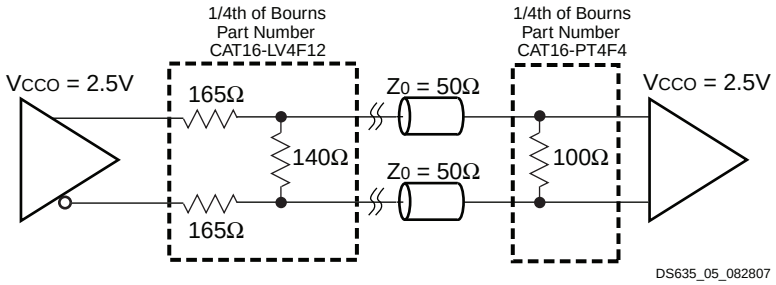

Figure 5: **External Termination Resistors for BLVDS I/Os**

I/O Timing

Table 13: **Pin-to-Pin Clock-to-Output Times for the IOB Output Path**

Symbol	Description	Conditions	Device	-4 Speed Grade Max	Units
Clock-to-Output Times					
$T_{ICKOFDCM}$	When reading from the Output Flip-Flop (OFF), the time from the active transition on the Global Clock pin to data appearing at the Output pin. The DCM is used.	LVCMOS25(2), 12mA output drive, Fast slew rate, with DCM(3)	**XA3S100E**	2.79	ns
			XA3S250E	3.45	ns
			XA3S500E	3.46	ns
			XA3S1200E	3.46	ns
			XA3S1600E	3.45	ns
T_{ICKOF}	When reading from OFF, the time from the active transition on the Global Clock pin to data appearing at the Output pin. The DCM is not used.	LVCMOS25(2), 12mA output drive, Fast slew rate, without DCM	**XA3S100E**	5.92	ns
			XA3S250E	5.43	ns
			XA3S500E	5.51	ns
			XA3S1200E	5.94	ns
			XA3S1600E	6.05	ns

Notes:

1. The numbers in this table are tested using the methodology presented in Table 20 and are based on the operating conditions set forth in Table 6 and Table 9.
2. This clock-to-output time requires adjustment whenever a signal standard other than LVCMOS25 is assigned to the Global Clock Input or a standard other than LVCMOS25 with 12 mA drive and Fast slew rate is assigned to the data Output. If the former is true, *add* the appropriate Input adjustment from Table 18. If the latter is true, *add* the appropriate Output adjustment from Table 19.
3. DCM output jitter is included in all measurements.

Table 14: **Pin-to-Pin Setup and Hold Times for the IOB Input Path (System Synchronous)**

Symbol	Description	Conditions	IFD_ DELAY_ VALUE=	Device	-4 Speed Grade Min	Units
Setup Times						
T_{PSDCM}	When writing to the Input Flip-Flop (IFF), the time from the setup of data at the Input pin to the active transition at a Global Clock pin. The DCM is used. No Input Delay is programmed.	LVCMOS25(2), IFD_DELAY_VALUE = 0, with DCM(4)	0	**XA3S100E**	2.98	ns
				XA3S250E	2.59	ns
				XA3S500E	2.59	ns
				XA3S1200E	2.58	ns
				XA3S1600E	2.59	ns
T_{PSFD}	When writing to IFF, the time from the setup of data at the Input pin to an active transition at the Global Clock pin. The DCM is not used. The Input Delay is programmed.	LVCMOS25(2), IFD_DELAY_VALUE = default software setting	2	**XA3S100E**	3.58	ns
			3	**XA3S250E**	3.91	ns
			2	**XA3S500E**	4.02	ns
			5	**XA3S1200E**	5.52	ns
			4	**XA3S1600E**	4.46	ns
Hold Times						
T_{PHDCM}	When writing to IFF, the time from the active transition at the Global Clock pin to the point when data must be held at the Input pin. The DCM is used. No Input Delay is programmed.	LVCMOS25(3), IFD_DELAY_VALUE = 0, with DCM(4)	0	**XA3S100E**	–0.52	ns
				XA3S250E	0.14	ns
				XA3S500E	0.14	ns
				XA3S1200E	0.15	ns
				XA3S1600E	0.14	ns
T_{PHFD}	When writing to IFF, the time from the active transition at the Global Clock pin to the point when data must be held at the Input pin. The DCM is not used. The Input Delay is programmed.	LVCMOS25(3), IFD_DELAY_VALUE = default software setting	2	**XA3S100E**	–0.24	ns
			3	**XA3S250E**	–0.32	ns
			2	**XA3S500E**	–0.49	ns
			5	**XA3S1200E**	–0.63	ns
			4	**XA3S1600E**	–0.39	ns

Notes:

1. The numbers in this table are tested using the methodology presented in Table 20 and are based on the operating conditions set forth in Table 6 and Table 9.
2. This setup time requires adjustment whenever a signal standard other than LVCMOS25 is assigned to the Global Clock Input or the data Input. If this is true of the Global Clock Input, subtract the appropriate adjustment from Table 18. If this is true of the data Input, add the appropriate Input adjustment from the same table.
3. This hold time requires adjustment whenever a signal standard other than LVCMOS25 is assigned to the Global Clock Input or the data Input. If this is true of the Global Clock Input, add the appropriate Input adjustment from Table 18. If this is true of the data Input, subtract the appropriate Input adjustment from the same table. When the hold time is negative, it is possible to change the data before the clock's active edge.
4. DCM output jitter is included in all measurements.

Table 15: **Setup and Hold Times for the IOB Input Path**

Symbol	Description	Conditions	IFD_ DELAY_ VALUE	Device	-4 Speed Grade Min	Units
Setup Times						
T_{IOPICK}	Time from the setup of data at the Input pin to the active transition at the ICLK input of the Input Flip-Flop (IFF). No Input Delay is programmed.	LVCMOS25(2), IFD_DELAY_VALUE = 0	0	All	2.12	ns
$T_{IOPICKD}$	Time from the setup of data at the Input pin to the active transition at the IFF's ICLK input. The Input Delay is programmed.	LVCMOS25(2), IFD_DELAY_VALUE = default software setting	2	**XA3S100E**	6.49	ns
			3	**XA3S250E**	6.85	ns
			2	**XA3S500E**	7.01	ns
			5	**XA3S1200E**	8.67	ns
			4	**XA3S1600E**	7.69	ns
Hold Times						
T_{IOICKP}	Time from the active transition at the IFF's ICLK input to the point where data must be held at the Input pin. No Input Delay is programmed.	LVCMOS25(2), IFD_DELAY_VALUE = 0	0	All	–0.76	ns
$T_{IOICKPD}$	Time from the active transition at the IFF's ICLK input to the point where data must be held at the Input pin. The Input Delay is programmed.	LVCMOS25(2), IFD_DELAY_VALUE = default software setting	2	**XA3S100E**	–3.93	ns
			3	**XA3S250E**	–3.51	ns
			2	**XA3S500E**	–3.74	ns
			5	**XA3S1200E**	–4.30	ns
			4	**XA3S1600E**	–4.14	ns
Set/Reset Pulse Width						
T_{RPW_IOB}	Minimum pulse width to SR control input on IOB			All	1.80	ns

Notes:

1. The numbers in this table are tested using the methodology presented in Table 20 and are based on the operating conditions set forth in Table 6 and Table 9.
2. This setup time requires adjustment whenever a signal standard other than LVCMOS25 is assigned to the data Input. If this is true, add the appropriate Input adjustment from Table 18.
3. These hold times require adjustment whenever a signal standard other than LVCMOS25 is assigned to the data Input. If this is true, subtract the appropriate Input adjustment from Table 18. When the hold time is negative, it is possible to change the data before the clock's active edge.

Table 16: **Propagation Times for the IOB Input Path**

Symbol	Description	Conditions	IFD_ DELAY_ VALUE	Device	-4 Speed Grade Max	Units
Propagation Times						
T_{IOPLI}	The time it takes for data to travel from the Input pin through the IFF latch to the I output with no input delay programmed	LVCMOS25(2), IFD_DELAY_VALUE = 0	0	All	2.25	ns
T_{IOPLID}	The time it takes for data to travel from the Input pin through the IFF latch to the I output with the input delay programmed	LVCMOS25(2), IFD_DELAY_VALUE = default software setting	2	**XA3S100E**	5.97	ns
			3	**XA3S250E**	6.33	ns
			2	**XA3S500E**	6.49	ns
			5	**XA3S1200E**	8.15	ns
			4	**XA3S1600E**	7.16	ns

Notes:

1. The numbers in this table are tested using the methodology presented in Table 20 and are based on the operating conditions set forth in Table 6 and Table 9.
2. This propagation time requires adjustment whenever a signal standard other than LVCMOS25 is assigned to the data Input. When this is true, *add* the appropriate Input adjustment from Table 18.

Table 17: **Input Timing Adjustments by IOSTANDARD**

Convert Input Time from LVCMOS25 to the Following Signal Standard (IOSTANDARD)	Add the Adjustment Below -4 Speed Grade	Units
Single-Ended Standards		
LVTTL	0.43	ns
LVCMOS33	0.43	ns
LVCMOS25	0	ns
LVCMOS18	0.98	ns
LVCMOS15	0.63	ns
LVCMOS12	0.27	ns
PCI33_3	0.42	ns
PCI66_3	0.42	ns
PCIX	0.22	ns
HSTL_I_18	0.12	ns
HSTL_III_18	0.17	ns
SSTL18_I	0.30	ns
SSTL2_I	0.15	ns

Table 17: **Input Timing Adjustments by IOSTANDARD**

Convert Input Time from LVCMOS25 to the Following Signal Standard (IOSTANDARD)	Add the Adjustment Below -4 Speed Grade	Units
Differential Standards		
LVDS_25	0.49	ns
BLVDS_25	0.39	ns
MINI_LVDS_25	0.49	ns
LVPECL_25	0.27	ns
RSDS_25	0.49	ns
DIFF_HSTL_I_18	0.49	ns
DIFF_HSTL_III_18	0.49	ns
DIFF_SSTL18_I	0.30	ns
DIFF_SSTL2_I	0.32	ns

Notes:

1. The numbers in this table are tested using the methodology presented in Table 20 and are based on the operating conditions set forth in Table 6, Table 9, and Table 11.
2. These adjustments are used to convert input path times originally specified for the LVCMOS25 standard to times that correspond to other signal standards.

Table 18: **Input Timing Adjustments by IOSTANDARD**

Convert Input Time from LVCMOS25 to the Following Signal Standard (IOSTANDARD)	Add the Adjustment Below	
	-4 Speed Grade	Units
Single-Ended Standards		
LVTTL	0.43	ns
LVCMOS33	0.43	ns
LVCMOS25	0	ns
LVCMOS18	0.98	ns
LVCMOS15	0.63	ns
LVCMOS12	0.27	ns
PCI33_3	0.42	ns
PCIX	0.22	ns
HSTL_I_18	0.12	ns
HSTL_III_18	0.17	ns
SSTL18_I	0.30	ns
SSTL2_I	0.15	ns

Table 18: **Input Timing Adjustments by IOSTANDARD**

Convert Input Time from LVCMOS25 to the Following Signal Standard (IOSTANDARD)	Add the Adjustment Below	
	-4 Speed Grade	Units
Differential Standards		
LVDS_25	0.49	ns
BLVDS_25	0.39	ns
MINI_LVDS_25	0.49	ns
LVPECL_25	0.27	ns
RSDS_25	0.49	ns
DIFF_HSTL_I_18	0.49	ns
DIFF_HSTL_III_18	0.49	ns
DIFF_SSTL18_I	0.30	ns
DIFF_SSTL2_I	0.32	ns

Notes:

1. The numbers in this table are tested using the methodology presented in Table 20 and are based on the operating conditions set forth in Table 6, Table 9, and Table 11.
2. These adjustments are used to convert input path times originally specified for the LVCMOS25 standard to times that correspond to other signal standards.

Table 19: **Output Timing Adjustments for IOB**

Convert Output Time from LVCMOS25 with 12mA Drive and Fast Slew Rate to the Following Signal Standard (IOSTANDARD)			Add the Adjustment Below -4 Speed Grade	Units
Single-Ended Standards				
LVTTL	Slow	2 mA	5.41	ns
		4 mA	2.41	ns
		6 mA	1.90	ns
		8 mA	0.67	ns
		12 mA	0.70	ns
		16 mA	0.43	ns
	Fast	2 mA	5.00	ns
		4 mA	1.96	ns
		6 mA	1.45	ns
		8 mA	0.34	ns
		12 mA	0.30	ns
		16 mA	0.30	ns
LVCMOS33	Slow	2 mA	5.29	ns
		4 mA	1.89	ns
		6 mA	1.04	ns
		8 mA	0.69	ns
		12 mA	0.42	ns
		16 mA	0.43	ns
	Fast	2 mA	4.87	ns
		4 mA	1.52	ns
		6 mA	0.39	ns
		8 mA	0.34	ns
		12 mA	0.30	ns
		16 mA	0.30	ns
LVCMOS25	Slow	2 mA	4.21	ns
		4 mA	2.26	ns
		6 mA	1.52	ns
		8 mA	1.08	ns
		12 mA	0.68	ns
	Fast	2 mA	3.67	ns
		4 mA	1.72	ns
		6 mA	0.46	ns
		8 mA	0.21	ns
		12 mA	0	ns

Table 19: **Output Timing Adjustments for IOB *(Continued)***

Convert Output Time from LVCMOS25 with 12mA Drive and Fast Slew Rate to the Following Signal Standard (IOSTANDARD)			Add the Adjustment Below -4 Speed Grade	Units
LVCMOS18	Slow	2 mA	5.24	ns
		4 mA	3.21	ns
		6 mA	2.49	ns
		8 mA	1.90	ns
	Fast	2 mA	4.15	ns
		4 mA	2.13	ns
		6 mA	1.14	ns
		8 mA	0.75	ns
LVCMOS15	Slow	2 mA	4.68	ns
		4 mA	3.97	ns
		6 mA	3.11	ns
	Fast	2 mA	3.38	ns
		4 mA	2.70	ns
		6 mA	1.53	ns
LVCMOS12	Slow	2 mA	6.63	ns
	Fast	2 mA	4.44	ns
HSTL_I_18			0.34	ns
HSTL_III_18			0.55	ns
PCI33_3			0.46	ns
PCIX			0.85	ns
SSTL18_I			0.25	ns
SSTL2_I			–0.20	ns
Differential Standards				
LVDS_25			–0.55	ns
BLVDS_25			0.04	ns
MINI_LVDS_25			–0.56	ns
LVPECL_25				ns
RSDS_25			–0.48	ns
DIFF_HSTL_I_18			0.42	ns
DIFF_HSTL_III_18			0.55	ns
DIFF_SSTL18_I			0.40	ns
DIFF_SSTL2_I			0.44	ns

Notes:

1. The numbers in this table are tested using the methodology presented in Table 20 and are based on the operating conditions set forth in Table 6, Table 9, and Table 11.
2. These adjustments are used to convert output- and three-state-path times originally specified for the LVCMOS25 standard with 12 mA drive and Fast slew rate to times that correspond to other signal standards. Do not adjust times that measure when outputs go into a high-impedance state.

Table 20: **Test Methods for Timing Measurement at I/Os**

Signal Standard (IOSTANDARD)		Inputs			Outputs		Inputs and Outputs
		V_{REF} (V)	V_L (V)	V_H (V)	R_T (Ω)	V_T (V)	V_M (V)
Single-Ended							
LVTTL		-	0	3.3	1M	0	1.4
LVCMOS33		-	0	3.3	1M	0	1.65
LVCMOS25		-	0	2.5	1M	0	1.25
LVCMOS18		-	0	1.8	1M	0	0.9
LVCMOS15		-	0	1.5	1M	0	0.75
LVCMOS12		-	0	1.2	1M	0	0.6
PCI33_3	Rising	-	Note 3	Note 3	25	0	0.94
	Falling				25	3.3	2.03
PCIX	Rising	-	Note 3	Note 3	25	0	0.94
	Falling				25	3.3	2.03
HSTL_I_18		0.9	V_{REF} – 0.5	V_{REF} + 0.5	50	0.9	V_{REF}
HSTL_III_18		1.1	V_{REF} – 0.5	V_{REF} + 0.5	50	1.8	V_{REF}
SSTL18_I		0.9	V_{REF} – 0.5	V_{REF} + 0.5	50	0.9	V_{REF}
SSTL2_I		1.25	V_{REF} – 0.75	V_{REF} + 0.75	50	1.25	V_{REF}
Differential							
LVDS_25		-	V_{ICM} – 0.125	V_{ICM} + 0.125	50	1.2	V_{ICM}
BLVDS_25		-	V_{ICM} – 0.125	V_{ICM} + 0.125	1M	0	V_{ICM}
MINI_LVDS_25		-	V_{ICM} – 0.125	V_{ICM} + 0.125	50	1.2	V_{ICM}
LVPECL_25		-	V_{ICM} – 0.3	V_{ICM} + 0.3	1M	0	V_{ICM}
RSDS_25		-	V_{ICM} – 0.1	V_{ICM} + 0.1	50	1.2	V_{ICM}
DIFF_HSTL_I_18		0.9	V_{REF} – 0.5	V_{REF} + 0.5	50	0.9	V_{REF}
DIFF_HSTL_III_18		1.1	V_{REF} – 0.5	V_{REF} + 0.5	50	1.8	V_{REF}
DIFF_SSTL18_I		0.9	V_{REF} – 0.5	V_{REF} + 0.5	50	0.9	V_{REF}
DIFF_SSTL2_I		1.25	V_{REF} – 0.5	V_{REF} + 0.5	50	1.25	V_{REF}

Notes:

1. Descriptions of the relevant symbols are as follows:
   V_{REF} – The reference voltage for setting the input switching threshold
   V_{ICM} – The common mode input voltage
   V_M – Voltage of measurement point on signal transition
   V_L – Low-level test voltage at Input pin
   V_H – High-level test voltage at Input pin
   R_T – Effective termination resistance, which takes on a value of 1MΩ when no parallel termination is required
   V_T – Termination voltage
2. The load capacitance (C_L) at the Output pin is 0 pF for all signal standards.
3. According to the PCI specification.

Configurable Logic Block (CLB) Timing

Table 21: **CLB (SLICEM) Timing**

Symbol	Description	-4 Speed Grade		Units
		Min	Max	
Clock-to-Output Times				
T_{CKO}	When reading from the FFX (FFY) Flip-Flop, the time from the active transition at the CLK input to data appearing at the XQ (YQ) output	-	0.60	ns
Setup Times				
T_{AS}	Time from the setup of data at the F or G input to the active transition at the CLK input of the CLB	0.52	-	ns
T_{DICK}	Time from the setup of data at the BX or BY input to the active transition at the CLK input of the CLB	0.36	-	ns
Hold Times				
T_{AH}	Time from the active transition at the CLK input to the point where data is last held at the F or G input	0	-	ns
T_{CKDI}	Time from the active transition at the CLK input to the point where data is last held at the BX or BY input	0	-	ns
Clock Timing				
T_{CH}	The High pulse width of the CLB's CLK signal	0.80	-	ns
T_{CL}	The Low pulse width of the CLK signal	0.80	-	ns
F_{TOG}	Toggle frequency (for export control)	0	572	MHz
Propagation Times				
T_{ILO}	The time it takes for data to travel from the CLB's F (G) input to the X (Y) output	-	0.76	ns
Set/Reset Pulse Width				
T_{RPW_CLB}	The minimum allowable pulse width, High or Low, to the CLB's SR input	1.80	-	ns

Notes:

1. The numbers in this table are based on the operating conditions set forth in Table 6.

Table 22: **CLB Distributed RAM Switching Characteristics**

Symbol	Description	-4		Units
		Min	Max	
Clock-to-Output Times				
T_{SHCKO}	Time from the active edge at the CLK input to data appearing on the distributed RAM output	-	2.35	ns
Setup Times				
T_{DS}	Setup time of data at the BX or BY input before the active transition at the CLK input of the distributed RAM	0.46	-	ns
T_{AS}	Setup time of the F/G address inputs before the active transition at the CLK input of the distributed RAM	0.52	-	ns
T_{WS}	Setup time of the write enable input before the active transition at the CLK input of the distributed RAM	0.40	-	ns
Hold Times				
T_{DH}	Hold time of the BX, BY data inputs after the active transition at the CLK input of the distributed RAM	0.15	-	ns
T_{AH}, T_{WH}	Hold time of the F/G address inputs or the write enable input after the active transition at the CLK input of the distributed RAM	0	-	ns
Clock Pulse Width				
T_{WPH}, T_{WPL}	Minimum High or Low pulse width at CLK input	1.01	-	ns

Table 23: **CLB Shift Register Switching Characteristics**

Symbol	Description	-4		Units
		Min	Max	
Clock-to-Output Times				
T_{REG}	Time from the active edge at the CLK input to data appearing on the shift register output	-	4.16	ns
Setup Times				
T_{SRLDS}	Setup time of data at the BX or BY input before the active transition at the CLK input of the shift register	0.46	-	ns
Hold Times				
T_{SRLDH}	Hold time of the BX or BY data input after the active transition at the CLK input of the shift register	0.16	-	ns
Clock Pulse Width				
T_{WPH}, T_{WPL}	Minimum High or Low pulse width at CLK input	1.01	-	ns

Clock Buffer/Multiplexer Switching Characteristics

Table 24: **Clock Distribution Switching Characteristics**

Description	Symbol	Maximum -4 Speed Grade	Units
Global clock buffer (BUFG, BUFGMUX, BUFGCE) I input to O-output delay	T_{GIO}	1.46	ns
Global clock multiplexer (BUFGMUX) select S-input setup to I0 and I1 inputs. Same as BUFGCE enable CE-input	T_{GSI}	0.63	ns
Frequency of signals distributed on global buffers (all sides)	F_{BUFG}	311	MHz

18 x 18 Embedded Multiplier Timing

Table 25: **18 x 18 Embedded Multiplier Timing**

Symbol	Description	-4 Speed Grade Min	-4 Speed Grade Max	Units
Combinatorial Delay				
T_{MULT}	Combinatorial multiplier propagation delay from the A and B inputs to the P outputs, assuming 18-bit inputs and a 36-bit product (AREG, BREG, and PREG registers unused)	-	4.88(1)	ns
Clock-to-Output Times				
T_{MSCKP_P}	Clock-to-output delay from the active transition of the CLK input to valid data appearing on the P outputs when using the PREG register(2)	-	1.20	ns
T_{MSCKP_A} T_{MSCKP_B}	Clock-to-output delay from the active transition of the CLK input to valid data appearing on the P outputs when using either the AREG or BREG register(2,4)	-	4.97	ns
Setup Times				
T_{MSDCK_P}	Data setup time at the A or B input before the active transition at the CLK when using only the PREG output register (AREG, BREG registers unused)	3.98	-	ns
T_{MSDCK_A}	Data setup time at the A input before the active transition at the CLK when using the AREG input register(4)	0.23	-	ns
T_{MSDCK_B}	Data setup time at the B input before the active transition at the CLK when using the BREG input register(4)	0.39	-	ns
Hold Times				
T_{MSCKD_P}	Data hold time at the A or B input before the active transition at the CLK when using only the PREG output register (AREG, BREG registers unused)	-0.97		
T_{MSCKD_A}	Data hold time at the A input before the active transition at the CLK when using the AREG input register(4)	0.04		
T_{MSCKD_B}	Data hold time at the B input before the active transition at the CLK when using the BREG input register(4)	0.05		

Table 25: **18 x 18 Embedded Multiplier Timing *(Continued)***

Symbol	Description	-4 Speed Grade		Units
		Min	Max	
Clock Frequency				
F_{MULT}	Internal operating frequency for a two-stage 18x18 multiplier using the AREG and BREG input registers and the PREG output register(1)	0	240	MHz

Notes:

1. Combinatorial delay is less and pipelined performance is higher when multiplying input data with less than 18 bits.
2. The PREG register is typically used in both single-stage and two-stage pipelined multiplier implementations.
3. The PREG register is typically used when inferring a single-stage multiplier.
4. Input registers AREG or BREG are typically used when inferring a two-stage multiplier.

Block RAM Timing

Table 26: **Block RAM Timing**

Symbol	Description	-4 Speed Grade		Units
		Min	Max	
Clock-to-Output Times				
T_{BCKO}	When reading from block RAM, the delay from the active transition at the CLK input to data appearing at the DOUT output	-	2.82	ns
Setup Times				
T_{BACK}	Setup time for the ADDR inputs before the active transition at the CLK input of the block RAM	0.38	-	ns
T_{BDCK}	Setup time for data at the DIN inputs before the active transition at the CLK input of the block RAM	0.23	-	ns
T_{BECK}	Setup time for the EN input before the active transition at the CLK input of the block RAM	0.77	-	ns
T_{BWCK}	Setup time for the WE input before the active transition at the CLK input of the block RAM	1.26	-	ns
Hold Times				
T_{BCKA}	Hold time on the ADDR inputs after the active transition at the CLK input	0.14	-	ns
T_{BCKD}	Hold time on the DIN inputs after the active transition at the CLK input	0.13	-	ns
T_{BCKE}	Hold time on the EN input after the active transition at the CLK input	0	-	ns
T_{BCKW}	Hold time on the WE input after the active transition at the CLK input	0	-	ns

Table 26: **Block RAM Timing *(Continued)***

Symbol	Description	-4 Speed Grade		Units
		Min	Max	
Clock Timing				
T_{BPWH}	High pulse width of the CLK signal	1.59	-	ns
T_{BPWL}	Low pulse width of the CLK signal	1.59	-	ns
Clock Frequency				
F_{BRAM}	Block RAM clock frequency. RAM read output value written back into RAM, for shift registers and circular buffers. Write-only or read-only performance is faster.	0	230	MHz

Notes:

1. The numbers in this table are based on the operating conditions set forth in Table 6.

Digital Clock Manager (DCM) Timing

For specification purposes, the DCM consists of three key components: the Delay-Locked Loop (DLL), the Digital Frequency Synthesizer (DFS), and the Phase Shifter (PS).

Aspects of DLL operation play a role in all DCM applications. All such applications inevitably use the CLKIN and the CLKFB inputs connected to either the CLK0 or the CLK2X feedback, respectively. Thus, specifications in the DLL tables (Table 27 and Table 28) apply to any application that only employs the DLL component. When the DFS and/or the PS components are used together with the DLL, then the specifications listed in the DFS and PS tables (Table 29 through Table 32) supersede any corresponding ones in the DLL tables. DLL specifications that do not change with the addition of DFS or PS functions are presented in Table 27 and Table 28.

Period jitter and cycle-cycle jitter are two of many different ways of specifying clock jitter. Both specifications describe statistical variation from a mean value.

Period jitter is the worst-case deviation from the ideal clock period over a collection of millions of samples. In a histogram of period jitter, the mean value is the clock period.

Cycle-cycle jitter is the worst-case difference in clock period between adjacent clock cycles in the collection of clock periods sampled. In a histogram of cycle-cycle jitter, the mean value is zero.

Delay-Locked Loop (DLL)

Table 27: **Recommended Operating Conditions for the DLL**

Symbol		Description		-4 Speed Grade Min	-4 Speed Grade Max	Units
Input Frequency Ranges						
F_{CLKIN}	CLKIN_FREQ_DLL	Frequency of the CLKIN clock input		5(2)	240(3)	MHz
Input Pulse Requirements						
CLKIN_PULSE		CLKIN pulse width as a percentage of the CLKIN period	$F_{CLKIN} \leq 150$ MHz	40%	60%	-
			$F_{CLKIN} > 150$ MHz	45%	55%	-
Input Clock Jitter Tolerance and Delay Path Variation(4)						
CLKIN_CYC_JITT_DLL_LF		Cycle-to-cycle jitter at the CLKIN input	$F_{CLKIN} \leq 150$ MHz	-	±300	ps
CLKIN_CYC_JITT_DLL_HF			$F_{CLKIN} > 150$ MHz	-	±150	ps
CLKIN_PER_JITT_DLL		Period jitter at the CLKIN input		-	±1	ns
CLKFB_DELAY_VAR_EXT		Allowable variation of off-chip feedback delay from the DCM output to the CLKFB input		-	±1	ns

Notes:

1. DLL specifications apply when any of the DLL outputs (CLK0, CLK90, CLK180, CLK270, CLK2X, CLK2X180, or CLKDV) are in use.
2. The DFS, when operating independently of the DLL, supports lower FCLKIN frequencies. See Table 29.
3. To support double the maximum effective FCLKIN limit, set the CLKIN_DIVIDE_BY_2 attribute to TRUE. This attribute divides the incoming clock period by two as it enters the DCM. The CLK2X output reproduces the clock frequency provided on the CLKIN input.
4. CLKIN input jitter beyond these limits might cause the DCM to lose lock.

Table 28: **Switching Characteristics for the DLL**

Symbol	Description	-4 Speed Grade Min	-4 Speed Grade Max	Units
Output Frequency Ranges				
CLKOUT_FREQ_CLK0	Frequency for the CLK0 and CLK180 outputs	5	240	MHz
CLKOUT_FREQ_CLK90	Frequency for the CLK90 and CLK270 outputs	5	200	MHz
CLKOUT_FREQ_2X	Frequency for the CLK2X and CLK2X180 outputs	10	311	MHz
CLKOUT_FREQ_DV	Frequency for the CLKDV output	0.3125	160	MHz
Output Clock Jitter(2,3,4)				
CLKOUT_PER_JITT_0	Period jitter at the CLK0 output	-	±100	ps
CLKOUT_PER_JITT_90	Period jitter at the CLK90 output	-	±150	ps
CLKOUT_PER_JITT_180	Period jitter at the CLK180 output	-	±150	ps
CLKOUT_PER_JITT_270	Period jitter at the CLK270 output	-	±150	ps
CLKOUT_PER_JITT_2X	Period jitter at the CLK2X and CLK2X180 outputs	-	±[1% of CLKIN period + 150]	ps
CLKOUT_PER_JITT_DV1	Period jitter at the CLKDV output when performing integer division	-	±150	ps
CLKOUT_PER_JITT_DV2	Period jitter at the CLKDV output when performing non-integer division	-	±[1% of CLKIN period + 200]	ps

Table 28: **Switching Characteristics for the DLL *(Continued)***

Symbol	Description		-4 Speed Grade Min	-4 Speed Grade Max	Units
Duty Cycle(4)					
CLKOUT_DUTY_CYCLE_DLL	Duty cycle variation for the CLK0, CLK90, CLK180, CLK270, CLK2X, CLK2X180, and CLKDV outputs, including the BUFGMUX and clock tree duty-cycle distortion		-	±[1% of CLKIN period + 400]	ps
Phase Alignment(4)					
CLKIN_CLKFB_PHASE	Phase offset between the CLKIN and CLKFB inputs		-	±200	ps
CLKOUT_PHASE_DLL	Phase offset between DLL outputs	CLK0 to CLK2X (not CLK2X180)	-	±[1% of CLKIN period + 100]	ps
		All others	-	±[1% of CLKIN period + 200]	ps
Lock Time					
LOCK_DLL(3)	When using the DLL alone: The time from deassertion at the DCM's Reset input to the rising transition at its LOCKED output. When the DCM is locked, the CLKIN and CLKFB signals are in phase	5 MHz ≤ F_{CLKIN} ≤ 15 MHz	-	5	ms
		F_{CLKIN} > 15 MHz	-	600	µs
Delay Lines					
DCM_DELAY_STEP	Finest delay resolution		20	40	ps

Notes:
1. The numbers in this table are based on the operating conditions set forth in Table 6 and Table 27.
2. Indicates the maximum amount of output jitter that the DCM adds to the jitter on the CLKIN input.
3. For optimal jitter tolerance and faster lock time, use the CLKIN_PERIOD attribute.
4. Some jitter and duty-cycle specifications include 1% of input clock period or 0.01 UI. ***Example:*** The data sheet specifies a maximum jitter of "±[1% of CLKIN period + 150]". Assume the CLKIN frequency is 100 MHz. The equivalent CLKIN period is 10 ns and 1% of 10 ns is 0.1 ns or 100 ps. According to the data sheet, the maximum jitter is ±[100 ps + 150 ps] = ±250ps.

Digital Frequency Synthesizer (DFS)

Table 29: **Recommended Operating Conditions for the DFS**

Symbol		Description		-4 Speed Grade Min	-4 Speed Grade Max	Units
Input Frequency Ranges(2)						
F_{CLKIN}	CLKIN_FREQ_FX	Frequency for the CLKIN input		0.200	333	MHz
Input Clock Jitter Tolerance(3)						
CLKIN_CYC_JITT_FX_LF		Cycle-to-cycle jitter at the CLKIN input, based on CLKFX output frequency	F_{CLKFX} ≤ 150 MHz	-	±300	ps
CLKIN_CYC_JITT_FX_HF			F_{CLKFX} > 150 MHz	-	±150	ps
CLKIN_PER_JITT_FX		Period jitter at the CLKIN input		-	±1	ns

Notes:
1. DFS specifications apply when either of the DFS outputs (CLKFX or CLKFX180) are used.
2. If both DFS and DLL outputs are used on the same DCM, follow the more restrictive CLKIN_FREQ_DLL specifications in Table 27.
3. CLKIN input jitter beyond these limits may cause the DCM to lose lock.

Table 30: **Switching Characteristics for the DFS**

Symbol	Description		Device	-4 Speed Grade Min	-4 Speed Grade Max	Units
Output Frequency Ranges						
CLKOUT_FREQ_FX	Frequency for the CLKFX and CLKFX180 outputs		All	5	311	MHz
Output Clock Jitter(2,3)						
CLKOUT_PER_JITT_FX	Period jitter at the CLKFX and CLKFX180 outputs		All	See Note 3		ps
CLKOUT_PER_JITT_FX_35 (T_{J35})	Period jitter at the CLKFX and CLKFX180 outputs when CLKFX_MULTIPLY=7, CLKFX_DIVIDE=2		All in FG or CP packages		±[2% of CLKFX period + 400]	ps
Duty Cycle(4,5)						
CLKOUT_DUTY_CYCLE_FX	Duty cycle precision for the CLKFX and CLKFX180 outputs, including the BUFGMUX and clock tree duty-cycle distortion		All	-	±[1% of CLKFX period + 400]	ps
Phase Alignment(5)						
CLKOUT_PHASE_FX	Phase offset between the DFS CLKFX output and the DLL CLK0 output when both the DFS and DLL are used		All	-	±200	ps
CLKOUT_PHASE_FX180	Phase offset between the DFS CLKFX180 output and the DLL CLK0 output when both the DFS and DLL are used		All	-	±[1% of CLKFX period + 300]	ps
Lock Time						
LOCK_FX(2)	The time from deassertion at the DCM's Reset input to the rising transition at its LOCKED output. The DFS asserts LOCKED when the CLKFX and CLKFX180 signals are valid. If using both the DLL and the DFS, use the longer locking time.	5 MHz ≤ F_{CLKIN} ≤ 15 MHz	All	-	5	ms
		F_{CLKIN} > 15 MHz		-	450	µs

Notes:
1. The numbers in this table are based on the operating conditions set forth in Table 6 and Table 29.
2. For optimal jitter tolerance and faster lock time, use the CLKIN_PERIOD attribute.
3. Use the Virtex™-II Jitter Calculator at http://www.xilinx.com/applications/web_ds_v2/jitter_calc.htm or the jitter calculator included in Clock Wizard/DCM Wizard. Output jitter includes 150 ps of input clock jitter.
4. The CLKFX and CLKFX180 outputs always have an approximate 50% duty cycle.
5. Some duty-cycle and alignment specifications include 1% of the CLKFX output period or 0.01 UI. ***Example:*** The data sheet specifies a maximum jitter of "±[1% of CLKFX period + 300]". Assume the CLKFX output frequency is 100 MHz. The equivalent CLKFX period is 10 ns and 1% of 10 ns is 0.1 ns or 100 ps. According to the data sheet, the maximum jitter is ±[100 ps + 300 ps] = ±400 ps.

Phase Shifter (PS)

Table 31: **Recommended Operating Conditions for the PS in Variable Phase Mode**

Symbol	Description	-4 Speed Grade Min	-4 Speed Grade Max	Units
Operating Frequency Ranges				
PSCLK_FREQ (F_{PSCLK})	Frequency for the PSCLK input	1	167	MHz
Input Pulse Requirements				
PSCLK_PULSE	PSCLK pulse width as a percentage of the PSCLK period	40%	60%	-

Table 32: **Switching Characteristics for the PS in Variable Phase Mode**

Symbol	Description		Units
Phase Shifting Range			
MAX_STEPS(2)	Maximum allowed number of DCM_DELAY_STEP steps for a given CLKIN clock period, where T = CLKIN clock period in ns. If using CLKIN_DIVIDE_BY_2 = TRUE, double the clock effective clock period.	±[INTEGER(20 • (T_{CLKIN} – 3 ns))]	steps
FINE_SHIFT_RANGE_MIN	Minimum guaranteed delay for variable phase shifting	±[MAX_STEPS • DCM_DELAY_STEP_MIN]	ns
FINE_SHIFT_RANGE_MAX	Maximum guaranteed delay for variable phase shifting	±[MAX_STEPS • DCM_DELAY_STEP_MAX]	ns

Notes:
1. The numbers in this table are based on the operating conditions set forth in Table 6 and Table 31.
2. The maximum variable phase shift range, MAX_STEPS, is only valid when the DCM is has no initial fixed phase shifting, i.e., the PHASE_SHIFT attribute is set to 0.
3. The DCM_DELAY_STEP values are provided at the bottom of Table 28.

Miscellaneous DCM Timing

Table 33: **Miscellaneous DCM Timing**

Symbol	Description	Min	Max	Units
DCM_RST_PW_MIN(1)	Minimum duration of a RST pulse width	3	-	CLKIN cycles
DCM_RST_PW_MAX(2)	Maximum duration of a RST pulse width	N/A	N/A	seconds
		N/A	N/A	seconds
DCM_CONFIG_LAG_TIME(3)	Maximum duration from V_{CCINT} applied to FPGA configuration successfully completed (DONE pin goes High) and clocks applied to DCM DLL	N/A	N/A	minutes
		N/A	N/A	minutes

Notes:
1. This limit only applies to applications that use the DCM DLL outputs (CLK0, CLK90, CLK180, CLK270, CLK2X, CLK2X180, and CLKDV). The DCM DFS outputs (CLKFX, CLKFX180) are unaffected.
2. This specification is equivalent to the Virtex-4 DCM_RESET specification. This specification does not apply for Spartan-3E FPGAs.
3. This specification is equivalent to the Virtex-4 TCONFIG specification. This specification does not apply for Spartan-3E FPGAs.

Configuration and JTAG Timing

Table 34: **Power-On Timing and the Beginning of Configuration**

Symbol	Description	Device	-4 Speed Grade		Units
			Min	Max	
T_{POR}[2]	The time from the application of V_{CCINT}, V_{CCAUX}, and V_{CCO} Bank 2 supply voltage ramps (whichever occurs last) to the rising transition of the INIT_B pin	XA3S100E	-	5	ms
		XA3S250E	-	5	ms
		XA3S500E	-	5	ms
		XA3S1200E	-	5	ms
		XA3S1600E	-	7	ms
T_{PROG}	The width of the low-going pulse on the PROG_B pin	All	0.5	-	µs
T_{PL}[2]	The time from the rising edge of the PROG_B pin to the rising transition on the INIT_B pin	XA3S100E	-	0.5	ms
		XA3S250E	-	0.5	ms
		XA3S500E	-	1	ms
		XA3S1200E	-	2	ms
		XA3S1600E	-	2	ms
T_{INIT}	Minimum Low pulse width on INIT_B output	All	250	-	ns
T_{ICCK}[3]	The time from the rising edge of the INIT_B pin to the generation of the configuration clock signal at the CCLK output pin	All	0.5	4.0	µs

Notes:

1. The numbers in this table are based on the operating conditions set forth in Table 6. This means power must be applied to all V_{CCINT}, V_{CCO}, and V_{CCAUX} lines.
2. Power-on reset and the clearing of configuration memory occurs during this period.
3. This specification applies only to the Master Serial, SPI, BPI-Up, and BPI-Down modes.

Configuration Clock (CCLK) Characteristics

Table 35: **Master Mode CCLK Output Period by *ConfigRate* Option Setting**

Symbol	Description	*ConfigRate* Setting	Temperature Range	Minimum	Maximum	Units
T_{CCLK1}	CCLK clock period by ***ConfigRate*** setting	1 *(power-on value)*	I-Grade Q-Grade	485	1,250	ns
T_{CCLK3}		3	I-Grade Q-Grade	242	625	ns
T_{CCLK6}		6	I-Grade Q-Grade	121	313	ns
T_{CCLK12}		12	I-Grade Q-Grade	60.6	157	ns
T_{CCLK25}		25	I-Grade Q-Grade	30.3	78.2	ns
T_{CCLK50}		50	I-Grade Q-Grade	15.1	39.1	ns

Notes:

1. Set the ***ConfigRate*** option value when generating a configuration bitstream. See Bitstream Generator (BitGen) Options in DS312, Module 2.

Table 36: **Master Mode CCLK Output Frequency by *ConfigRate* Option Setting**

Symbol	Description	*ConfigRate* Setting	Temperature Range	Minimum	Maximum	Units
F_{CCLK1}	Equivalent CCLK clock frequency by ***ConfigRate*** setting	1 *(power-on value)*	I-Grade Q-Grade	0.8	2.1	MHz
F_{CCLK3}		3	I-Grade Q-Grade	1.6	4.2	MHz
F_{CCLK6}		6	I-Grade Q-Grade	3.2	8.3	MHz
F_{CCLK12}		12	I-Grade Q-Grade	6.4	16.5	MHz
F_{CCLK25}		25	I-Grade Q-Grade	12.8	33.0	MHz
F_{CCLK50}		50	I-Grade Q-Grade	25.6	66.0	MHz

Table 37: **Master Mode CCLK Output Minimum Low and High Time**

Symbol	Description		*ConfigRate* Setting						Units
			1	3	6	12	25	50	
T_{MCCL}, T_{MCCH}	Master mode CCLK minimum Low and High time	I-Grade Q-Grade	235	117	58	29.3	14.5	7.3	ns

Table 38: **Slave Mode CCLK Input Low and High Time**

Symbol	Description	Min	Max	Units
T_{SCCL}, T_{SCCH}	CCLK Low and High time	5	∞	ns

Master Serial and Slave Serial Mode Timing

Table 39: **Timing for the Master Serial and Slave Serial Configuration Modes**

Symbol	Description		Slave/ Master	-4 Speed Grade		Units
				Min	Max	
Clock-to-Output Times						
T_{CCO}	The time from the falling transition on the CCLK pin to data appearing at the DOUT pin		Both	1.5	10.0	ns
Setup Times						
T_{DCC}	The time from the setup of data at the DIN pin to the active edge of the CCLK pin		Both	11.0	-	ns
Hold Times						
T_{CCD}	The time from the active edge of the CCLK pin to the point when data is last held at the DIN pin		Both	0	-	ns
Clock Timing						
T_{CCH}	High pulse width at the CCLK input pin		Master	See Table 37		
			Slave	See Table 38		
T_{CCL}	Low pulse width at the CCLK input pin		Master	See Table 37		
			Slave	See Table 38		
F_{CCSER}	Frequency of the clock signal at the CCLK input pin	No bitstream compression	Slave	0	66(2)	MHz
		With bitstream compression		0	20	MHz

Notes:

1. The numbers in this table are based on the operating conditions set forth in Table 6.
2. For serial configuration with a daisy-chain of multiple FPGAs, the maximum limit is 25 MHz.

Slave Parallel Mode Timing

Table 40: **Timing for the Slave Parallel Configuration Mode**

Symbol	Description			-4 Speed Grade Min	-4 Speed Grade Max	Units
Clock-to-Output Times						
T_{SMCKBY}	The time from the rising transition on the CCLK pin to a signal transition at the BUSY pin			-	12.0	ns
Setup Times						
T_{SMDCC}	The time from the setup of data at the D0-D7 pins to the active edge the CCLK pin			11.0	-	ns
T_{SMCSCC}	Setup time on the CSI_B pin before the active edge of the CCLK pin			10.0	-	ns
T_{SMCCW}(2)	Setup time on the RDWR_B pin before active edge of the CCLK pin			23.0	-	ns
Hold Times						
T_{SMCCD}	The time from the active edge of the CCLK pin to the point when data is last held at the D0-D7 pins			1.0	-	ns
T_{SMCCCS}	The time from the active edge of the CCLK pin to the point when a logic level is last held at the CSO_B pin			0	-	ns
T_{SMWCC}	The time from the active edge of the CCLK pin to the point when a logic level is last held at the RDWR_B pin			0	-	ns
Clock Timing						
T_{CCH}	The High pulse width at the CCLK input pin			5	-	ns
T_{CCL}	The Low pulse width at the CCLK input pin			5	-	ns
F_{CCPAR}	Frequency of the clock signal at the CCLK input pin	No bitstream compression	Not using the BUSY pin(2)	0	50	MHz
			Using the BUSY pin	0	66	MHz
		With bitstream compression		0	20	MHz

Notes:

1. The numbers in this table are based on the operating conditions set forth in Table 6.
2. In the Slave Parallel mode, it is necessary to use the BUSY pin when the CCLK frequency exceeds this maximum specification.
3. Some Xilinx documents refer to Parallel modes as “SelectMAP” modes.

Serial Peripheral Interface (SPI) Configuration Timing

Table 41: **Timing for Serial Peripheral Interface (SPI) Configuration Mode**

Symbol	Description	Minimum	Maximum	Units
T_{CCLK1}	Initial CCLK clock period	(see Table 35)		
T_{CCLKn}	CCLK clock period after FPGA loads ConfigRate setting	(see Table 35)		
T_{MINIT}	Setup time on VS[2:0] and M[2:0] mode pins before the rising edge of INIT_B	50	-	ns
T_{INITM}	Hold time on VS[2:0] and M[2:0]mode pins after the rising edge of INIT_B	0	-	ns
T_{CCO}	MOSI output valid after CCLK edge	See Table 39		
T_{DCC}	Setup time on DIN data input before CCLK edge	See Table 39		
T_{CCD}	Hold time on DIN data input after CCLK edge	See Table 39		

Table 42: **Configuration Timing Requirements for Attached SPI Serial Flash**

Symbol	Description	Requirement	Units
T_{CCS}	SPI serial Flash PROM chip-select time	$T_{CCS} \leq T_{MCCL1} - T_{CCO}$	ns
T_{DSU}	SPI serial Flash PROM data input setup time	$T_{DSU} \leq T_{MCCL1} - T_{CCO}$	ns
T_{DH}	SPI serial Flash PROM data input hold time	$T_{DH} \leq T_{MCCH1}$	ns
T_V	SPI serial Flash PROM data clock-to-output time	$T_V \leq T_{MCCLn} - T_{DCC}$	ns
f_C or f_R	Maximum SPI serial Flash PROM clock frequency (also depends on specific read command used)	$f_C \geq \frac{1}{T_{CCLKn(min)}}$	MHz

Notes:

1. These requirements are for successful FPGA configuration in SPI mode, where the FPGA provides the CCLK frequency. The post configuration timing can be different to support the specific needs of the application loaded into the FPGA and the resulting clock source.
2. Subtract additional printed circuit board routing delay as required by the application.

Byte Peripheral Interface (BPI) Configuration Timing

Table 43: **Timing for Byte-wide Peripheral Interface (BPI) Configuration Mode**

Symbol	Description		Minimum	Maximum	Units
T_{CCLK1}	Initial CCLK clock period		(see Table 35)		
T_{CCLKn}	CCLK clock period after FPGA loads ConfigRate setting		(see Table 35)		
T_{MINIT}	Setup time on CSI_B, RDWR_B, and M[2:0] mode pins before the rising edge of INIT_B		50	-	ns
T_{INITM}	Hold time on CSI_B, RDWR_B, and M[2:0] mode pins after the rising edge of INIT_B		0	-	ns
$T_{INITADDR}$	Minimum period of initial A[23:0] address cycle; LDC[2:0] and HDC are asserted and valid	**BPI-UP:** (M[2:0]=<0:1:0>)	5	5	T_{CCLK1} cycles
		BPI-DN: (M[2:0]=<0:1:1>)	2	2	
T_{CCO}	Address A[23:0] outputs valid after CCLK falling edge		See Table 39		
T_{DCC}	Setup time on D[7:0] data inputs before CCLK falling edge		See Table 39		
T_{CCD}	Hold time on D[7:0] data inputs after CCLK falling edge		See Table 39		

Table 44: **Configuration Timing Requirements for Attached Parallel NOR Flash**

Symbol	Description	Requirement	Units
T_{CE} (t_{ELQV})	Parallel NOR Flash PROM chip-select time	$T_{CE} \leq T_{INITADDR}$	ns
T_{OE} (t_{GLQV})	Parallel NOR Flash PROM output-enable time	$T_{OE} \leq T_{INITADDR}$	ns
T_{ACC} (t_{AVQV})	Parallel NOR Flash PROM read access time	$T_{ACC} \leq T_{CCLKn(min)} - T_{CCO} - T_{DCC} - PCB$	ns
T_{BYTE} (t_{FLQV}, t_{FHQV})	For x8/x16 PROMs only: BYTE# to output valid time(3)	$T_{BYTE} \leq T_{INITADDR}$	ns

Notes:

1. These requirements are for successful FPGA configuration in BPI mode, where the FPGA provides the CCLK frequency. The post configuration timing can be different to support the specific needs of the application loaded into the FPGA and the resulting clock source.
2. Subtract additional printed circuit board routing delay as required by the application.
3. The initial BYTE# timing can be extended using an external, appropriately sized pull-down resistor on the FPGA's LDC2 pin. The resistor value also depends on whether the FPGA's HSWAP pin is High or Low.

Table 45: **MultiBoot Trigger (MBT) Timing**

Symbol	Description	Minimum	Maximum	Units
T_{MBT}	MultiBoot Trigger (MBT) Low pulse width required to initiate MultiBoot reconfiguration	300	∞	ns

Notes:

1. MultiBoot reconfiguration starts on the rising edge after MBT is Low for at least the prescribed minimum period.

IEEE 1149.1/1553 JTAG Test Access Port Timing

Table 46: **Timing for the JTAG Test Access Port**

Symbol	Description	-4 Speed Grade		Units
		Min	Max	
Clock-to-Output Times				
T_{TCKTDO}	The time from the falling transition on the TCK pin to data appearing at the TDO pin	1.0	11.0	ns
Setup Times				
T_{TDITCK}	The time from the setup of data at the TDI pin to the rising transition at the TCK pin	7.0	-	ns
T_{TMSTCK}	The time from the setup of a logic level at the TMS pin to the rising transition at the TCK pin	7.0	-	ns
Hold Times				
T_{TCKTDI}	The time from the rising transition at the TCK pin to the point when data is last held at the TDI pin	0	-	ns
T_{TCKTMS}	The time from the rising transition at the TCK pin to the point when a logic level is last held at the TMS pin	0	-	ns
Clock Timing				
T_{CCH}	The High pulse width at the TCK pin	5	-	ns
T_{CCL}	The Low pulse width at the TCK pin	5	-	ns
F_{TCK}	Frequency of the TCK signal	-	25	MHz

Notes:

1. The numbers in this table are based on the operating conditions set forth in Table 6.

Automotive Warranty Disclaimer

THIS WARRANTY DOES NOT EXTEND TO ANY IMPLEMENTATION IN AN APPLICATION OR ENVIRONMENT THAT IS NOT CONTAINED WITHIN XILINX SPECIFICATIONS. PRODUCTS ARE NOT DESIGNED TO BE FAIL-SAFE AND ARE NOT WARRANTED FOR USE IN THE DEPLOYMENT OF AIRBAGS. FURTHER, PRODUCTS ARE NOT WARRANTED FOR USE IN APPLICATIONS THAT AFFECT CONTROL OF THE VEHICLE UNLESS THERE IS A FAIL-SAFE OR REDUNDANCY FEATURE AND ALSO A WARNING SIGNAL TO THE OPERATOR OF THE VEHICLE UPON FAILURE. USE OF PRODUCTS IN SUCH APPLICATIONS IS FULLY AT THE RISK OF CUSTOMER SUBJECT TO APPLICABLE LAWS AND REGULATIONS GOVERNING LIMITATIONS ON PRODUCT LIABILITY.

Revision History

The following table shows the revision history for this document.

Date	Version	Revision
08/31/07	1.0	Initial Xilinx release.